20A 4 Gang Intermediate Toggle - Flat Plate

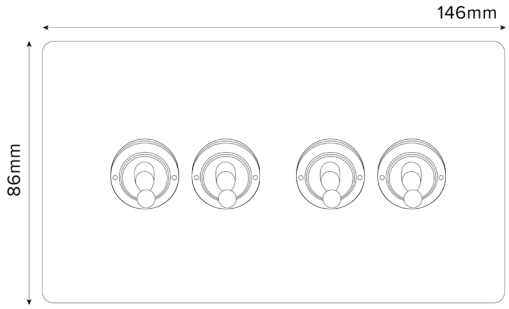

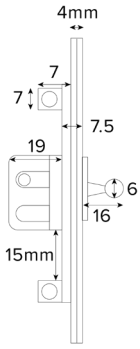

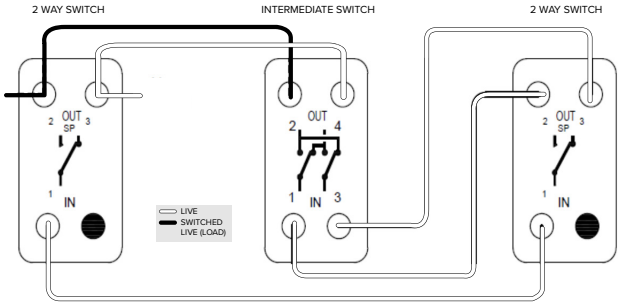

TECHNICAL SPECIFICATION

Standard(s)	BS EN 60669-1
Voltage Rating	20 Amp, 250V~ (20AX – no derating for inductive or fluorescent loads)
Contact Gap	Normal Gap
Mounting Box Depth (Min)	35mm
Terminal Capacity	3 x 2.5mm^2, 2 x 4.0mm^2, 1x 6.0mm^2
Earth Terminal Capacity	3 x 2.5mm^2, 2 x 4.0mm^2, 1x 6.0mm^2
Fixing Centres	120.6mm
Size	86mm x 146mm x 4mm (Plate thickness - 2mm)
Product Class 1	Face plate must be earthed
Ambient Operating Temperature	-5° to +40°C
Recommended Location	Internal Use Only
Maximum Installation Altitude	2000m
IP Rating	IP2XD
Switched Poles	Single
Mains Frequency	50hz - 60hz
Contact Gap Minimum	3mm
Trademarks	The Soho Lighting Company is a registered trade mark number: UK00003313349, EU017906396, Date: 25 May 2018

All products listed conform to current British or European standard and the product information is correct at the time of going to press.

Illustrations and diagrams are reproduced within the limitations of reproduction and printing process and are not binding.

Due to manufacturing processes we cannot guarantee an exact colour match and shadings of certain finishes.

The Soho Lighting Company. Registered in England Number: 10797307. Copyright © 2018 All Rights Reserved.